Trimble Optimisation Process Flowchart

#1 Rake IN

NOTE:
1) Tune one variable at a time following the suggested priority numbers (e.g. #1,#2,#3).
2) See Informational Diagram for definition of Sections

Version 2.0 March 2021

START

Recheck
- Boom Raise Response: ↓ (#1)
- Boom Takeoff Speed: ↓ (#2)
- Boom Raise Speed: ↓ (#3)
- Joystick Response Speed: ↓ (#4)

Oscillates?

Start of Pull OK? (Section A)
- No → Above Grade? / Below Grade?
- Yes → Perform Check #1 Any Changes Made?
  - Yes → Recheck
  - No → Start of Section B Ok? (Section B)

Recheck
- Boom Takeoff Speed: ↓ (#1)
- Boom Raise Response: ↓ (#2)
- Joystick Response Speed: ↓ (#3)
- ↑ (#1)
- ↑ (#2)
- ↑ (#3)

Above Grade? / Below Grade?

Start of Section B Ok? (Section B)
- No → Above Grade? / Below Grade?
- Yes → Perform Checks #1 & #2 Any Changes Made?
  - Yes → Recheck
  - No → Midway of Pull OK? (Section B)

Recheck
- Boom Raise Response: ↓ (#1)
- ↑ (#1)

Above Grade? / Below Grade?

Note: Midway is Before and Around Apex

Midway of Pull OK? (Section B)
- No → Above Grade? / Below Grade?
- Yes → Perform Checks #1 & #2 Any Changes Made?
  - Yes → Recheck
  - No → After Apex OK? (Begin/Middle of Section C)

Recheck
- Boom Raise Speed: ↓ (#1)
- Boom Lower Speed: ↑ (#2)
- ↑ (#1)
- ↓ (#2)

Above Grade? / Below Grade?

After Apex OK? (Begin/Middle of Section C)
- No → Above grade? / Oscillates? / Below Grade?
- Yes → Perform Checks #1, #2, #3 Any Changes Made?
  - Yes → Recheck
  - No → Section A,B,C Completed without adjustments and < +/-2.5cm?

Recheck
- Boom Lower Response: ↑ (#1)
- Boom Lower Speed: ↑ (#2)
- ↓ (#1)
- ↓ (#2)

Above grade? / Oscillates? / Below Grade?

Section A,B,C Completed without adjustments and < +/-2.5cm?
- Yes → **Rake IN Tuning Completed**
- No → START

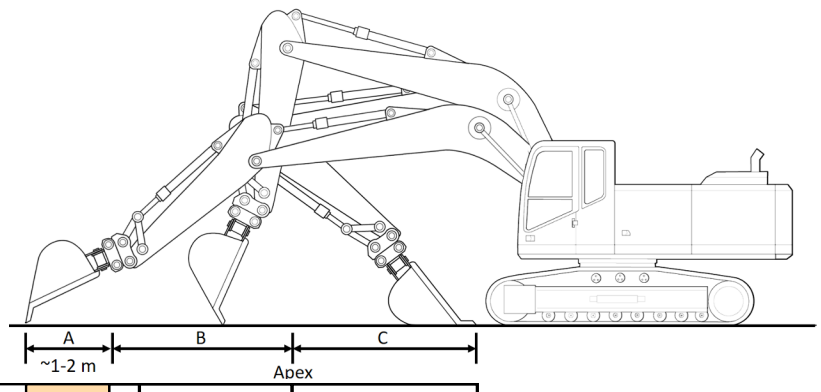

Boom Takeoff Speed				
Joystick Response Speed				
Boom Raise Response				
Boom Rasie Speed				
Boom Lower Speed				
Boom Lower Response				

Additional Checks

- #1 Full Length Pass coming in from above grade
- #2 Full Length Pass with no load
- #3 Full Length Pass at slower stick speeds

Completed: When satisfied with above meeting +/-2.5cm

Below Grade but Smooth?	Check During Each Section Evaluation	Recheck Sections A & B	Check these in Sections A + B, adjust as follows
	Boom Raise Speed ↑ (#1); Boom Raise Response ↑ (#2)	(verify not cutting high or jumping above grade) Above Grade?	Boom Takeoff Speed ↓ (#1); Joystick Response Speed ↓ (#2)
Oscillates?	Boom Raise Speed ↓ (#2); Boom Raise Response ↓ (#1)	(verify not cutting low or diving below grade) Below Grade?	Boom Takeoff Speed ↑ (#1); Joystick Response Speed ↑ (#2)
		(verify not cutting high or jumping above grade) Above Grade?	Boom Takeoff Speed ↓ (#1); Joystick Response Speed ↑ (#2)

Parameters available for tuning
- Boom Raise Speed
- Boom Raise Response
- Boom Lower Speed
- Boom Lower Response
- Boom Takeoff Speed
- Attachment Dump Speed
- Attachment Dump Response
- Attachment Curl Speed
- Attachment Curl Response
- Attachment Attack Angle
- Joystick Response Speed

Parameters in the Flow Charts
- Boom Raise Speed
- Boom Raise Response
- Boom Lower Speed
- Boom Lower Response
- Boom Takeoff Speed
- Bucket Dump Speed
- Bucket Dump Response
- Bucket Curl Speed
- Bucket Curl Response
- Bucket Attack Angle
- Joystick Response Speed

Boom Raise Speed	Boom Lower Speed	Boom Takeoff Speed	Bucket Dump Speed	Bucket Curl Speed
Boom Raise Response	Boom Lower Response	Joystick Response Speed	Bucket Dump Response	Bucket Curl Response
				Bucket Attack Angle

#2 Flat Bucket

NOTES:
Tune one variable at a time following the suggested priority numbers (e.g. #1,#2,#3)
Bucket should be engaged in autos when attachment match is +/- 1 degree from design

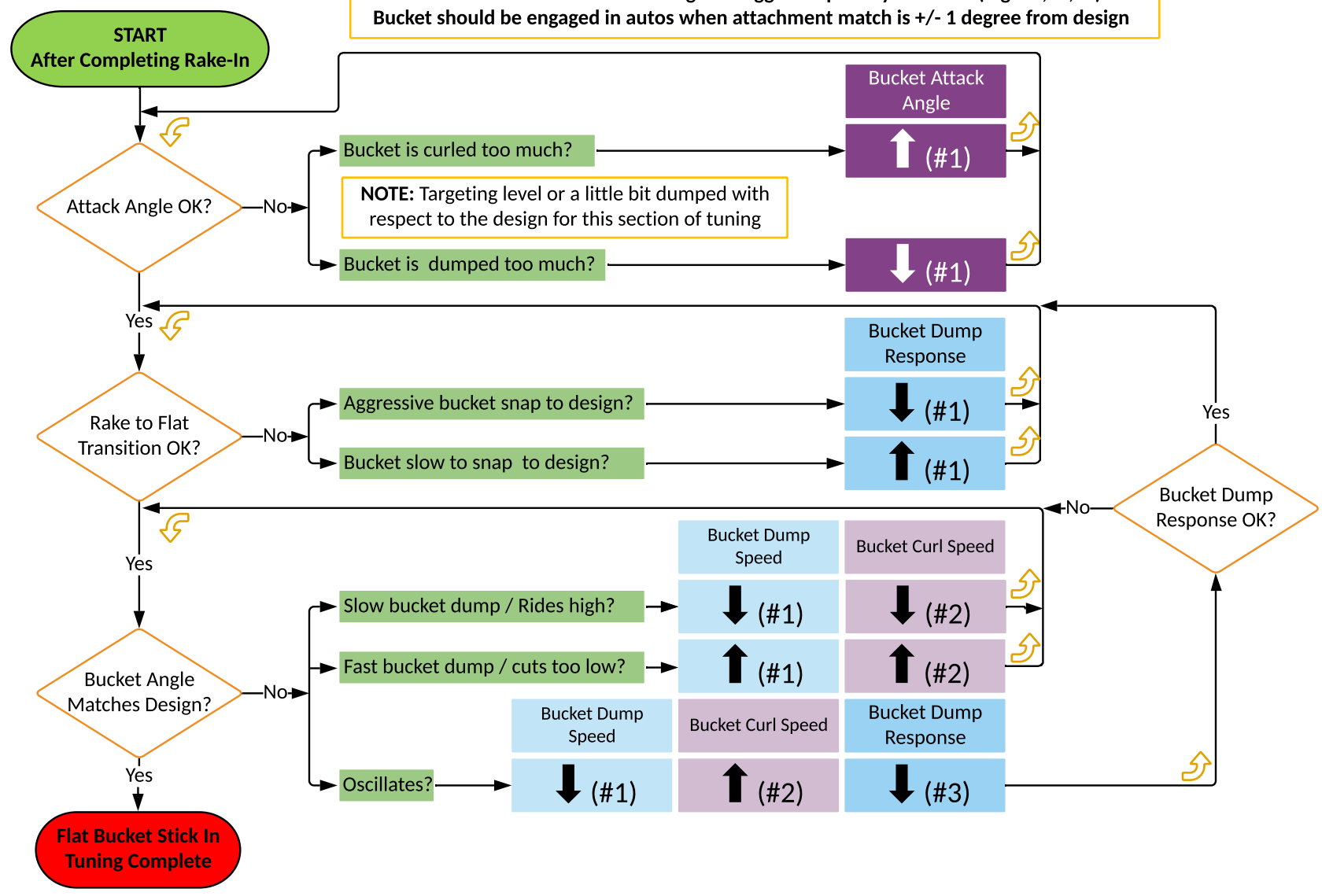

Parameters available for tuning

- Boom Raise Speed
- Boom Raise Response
- Boom Lower Speed
- Boom Lower Response
- Boom Takeoff Speed
- Attachment Dump Speed
- Attachment Dump Response
- Attachment Curl Speed
- Attachment Curl Response
- Attachment Attack Angle
- Joystick Response Speed

Parameters in the Flow Charts

- Boom Raise Speed
- Boom Raise Response
- Boom Lower Speed
- Boom Lower Response
- Boom Takeoff Speed
- Bucket Dump Speed
- Bucket Dump Response
- Bucket Curl Speed
- Bucket Curl Response
- Bucket Attack Angle
- Joystick Response Speed

Boom Raise Speed	Boom Lower Speed	Boom Takeoff Speed	Bucket Dump Speed	Bucket Curl Speed
Boom Raise Response	Boom Lower Response	Joystick Response Speed	Bucket Dump Response	Bucket Curl Response
				Bucket Attack Angle

Version 2.0 March 2021